Product Category	H866-20-24-CUNI
Part Description	Direct Weld/Braze Insert (Male Tube X Pipe SW)

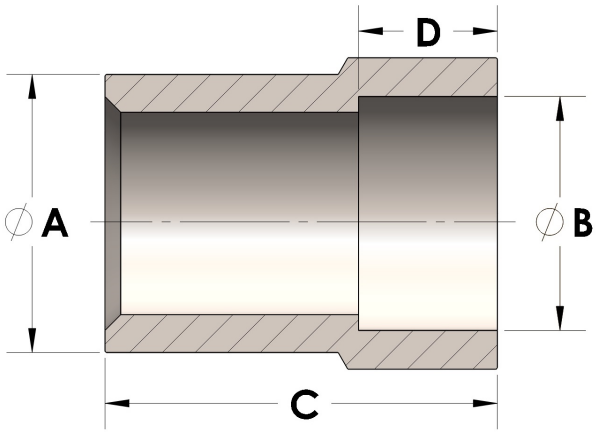

DIMENSIONS

A	1.250
B	1.91
C	2.13
D	0.500

GENERAL

Pressure Rating	2500 PSI
Fitting Material	Copper Nickel 70/30, MIL-C--15726F, UNS C71500

The complete catalog contents must be reviewed to ensure that the system designer and user make a safe product selection. When selecting products, the total system design must be considered to ensure safe, trouble-free performance. Function, material compatibility, adequate ratings, proper installation, operation, and maintenance are the responsibilities of the system designer and user. Caution: Do not mix or interchange valve components with those of other manufacturers.