Product Category	H865-04-08-SS316L
Part Description	Direct Weld/Braze Insert (Male Pipe X Tube SW)

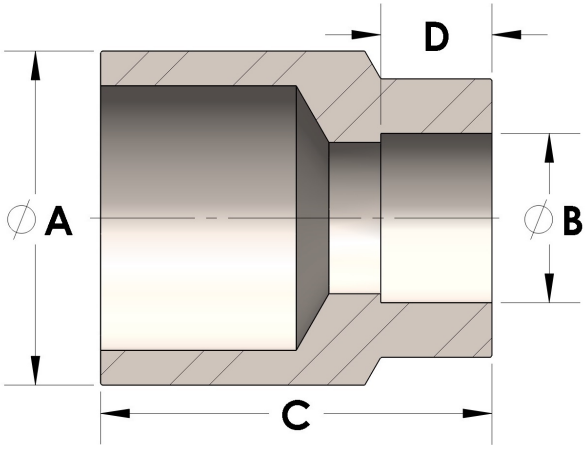

DIMENSIONS

A	0.540
B	0.50
C	1.00
D	0.310

GENERAL

Pressure Rating	6000 PSI
Fitting Material	316/L Stainless Steel, ASTM A276, UNS S31600/03

The complete catalog contents must be reviewed to ensure that the system designer and user make a safe product selection. When selecting products, the total system design must be considered to ensure safe, trouble-free performance. Function, material compatibility, adequate ratings, proper installation, operation, and maintenance are the responsibilities of the system designer and user. Caution: Do not mix or interchange valve components with those of other manufacturers.