Product Category	110D-G-SS-R
Product Line	Steel Flanged Check Valves (110D, 111D, 113D, 114D, 115D)
Part Description	CLASS 150 Flange Style Silent Check Valve with Steel Body and Stainless Steel Trim

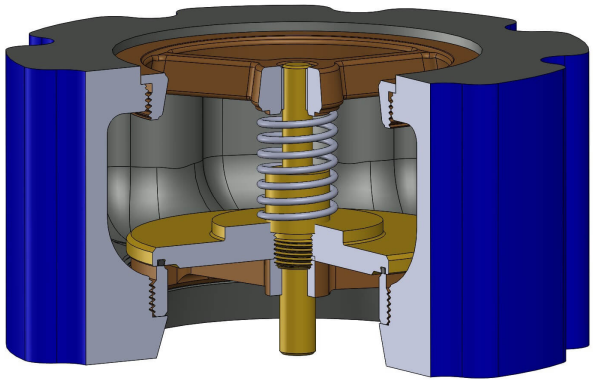

DIMENSIONS

Face to Face	8
Dia. of Bolt Circle	11.75
Dia. of Flange	13.50
No. of Studs	8
Dia. of Studs	0.75
Length of Studs	12.50
Weight (lbs.)	94

GENERAL

Pressure Rating	up to 290 PSI
Temperature Range	-30°F to 250°F (-34°C to 121°C)
Standard Soft Goods	Buna-N O-Rings
Cartridge Type	Check
Connection Type	ANSI B16.5 Flange
Connection Size	8"
Body Material	Carbon Steel, ASTM A216, WCB, UNS J03002

OPTIONS

Port & Vent Options	[-DP] Drain Plug Above Seat (3/4" NPT)

The complete catalog contents must be reviewed to ensure that the system designer and user make a safe product selection. When selecting products, the total system design must be considered to ensure safe, trouble-free performance. Function, material compatibility, adequate ratings, proper installation, operation, and maintenance are the responsibilities of the system designer and user. Caution: Do not mix or interchange valve components with those of other manufacturers.