Product Category	34-3
Product Line	NPT Threaded Check Valves (34, 36, 37 Series)
Part Description	Steel Body In-line Silent Check Valve with Female Pipe Thread (NPT) Ends

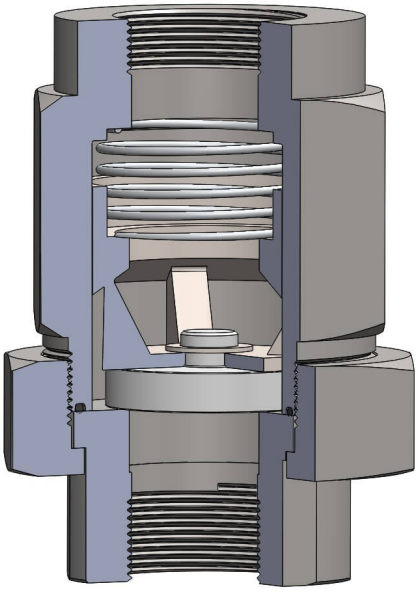

DIMENSIONS

End to End	3.94
Female Inlet and Outlet (NPT)	1/2"-14
Weight (lbs.)	2

GENERAL

Pressure Rating	300 PSI
Temperature Range	-30°F to 250°F (-34°C to 121°C)
Standard Soft Goods	Buna-N O-Rings and Nylon Disc
Cartridge Type	Check
Connection Type	Female Pipe Thread (NPT)
Connection Size	1/2"
Body Material	Carbon Steel, ASTM A36/A311, UNS K02600/G10180

OPTIONS

The complete catalog contents must be reviewed to ensure that the system designer and user make a safe product selection. When selecting products, the total system design must be considered to ensure safe, trouble-free performance. Function, material compatibility, adequate ratings, proper installation, operation, and maintenance are the responsibilities of the system designer and user. Caution: Do not mix or interchange valve components with those of other manufacturers.