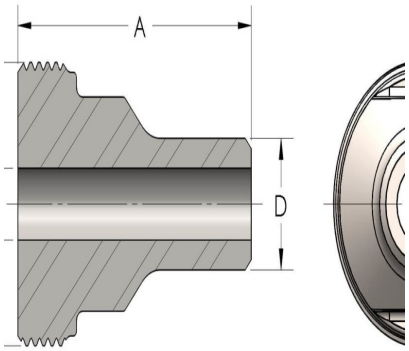

62T-8-CUNI

Description

PRODUCTCATEGORY

1. Fitting

FITTINGTYPE

1. O-SEALÂ®

Date
11/03/2025