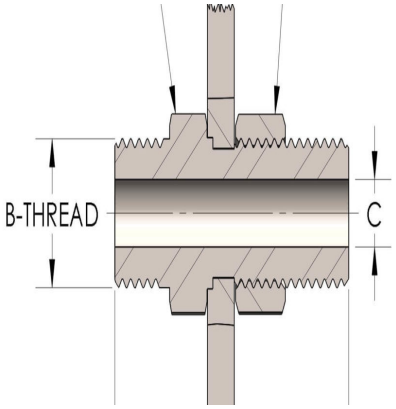

89T-5-S

Description

PRODUCTCATEGORY

1. Fitting

FITTINGTYPE

1. O-SEALÂ®

Date
10/31/2025