Product Category	89T-5-S
Part Description	Bulkhead

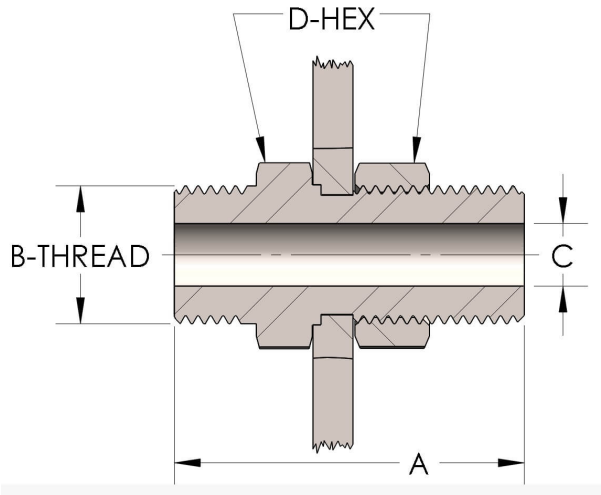

DIMENSIONS

A	2.940
B-THREAD	2.313" - 12UNS
C	0.81
D-HEX	2.75

GENERAL

Pressure Rating	6000 PSI
Threadpiece Material	Carbon Steel, ASTM A108

The complete catalog contents must be reviewed to ensure that the system designer and user make a safe product selection. When selecting products, the total system design must be considered to ensure safe, trouble-free performance. Function, material compatibility, adequate ratings, proper installation, operation, and maintenance are the responsibilities of the system designer and user. Caution: Do not mix or interchange valve components with those of other manufacturers.