Product Category	H810-16-SS316L
Part Description	Socketweld/braze Tube Tee Assembly

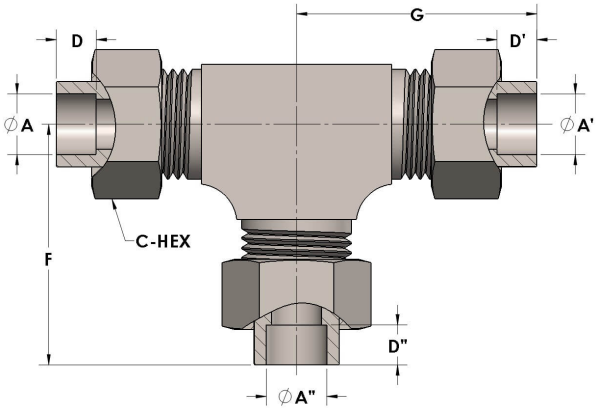

DIMENSIONS

A	1.000
A"	1.000
A"	1.000
C-HEX	1.63
D	0.500
D"	0.500
D"	0.500
F	2.75
G	2.75

GENERAL

Pressure Rating	4500 PSI
Assembly Material	316/L Stainless Steel, ASTM A276, UNS S31600/03
O-Ring Material	Viton® Fluorocarbon Type 1, Class 2 (90 durometer)
Connection 1 Type	Female Tube Socket
Connection 1 Size	1" Tube O.D. (-16)
Connection 2 Type	Female Tube Socket
Connection 2 Size	1" Tube O.D. (-16)
Connection 3 Type	Female Tube Socket

Connection 3 Size	1" Tube O.D. (-16)

The complete catalog contents must be reviewed to ensure that the system designer and user make a safe product selection. When selecting products, the total system design must be considered to ensure safe, trouble-free performance. Function, material compatibility, adequate ratings, proper installation, operation, and maintenance are the responsibilities of the system designer and user. Caution: Do not mix or interchange valve components with those of other manufacturers.