Product Category	H816-04-04-04-S
Part Description	Tube to Male Straight Thread Run Tee Assembly

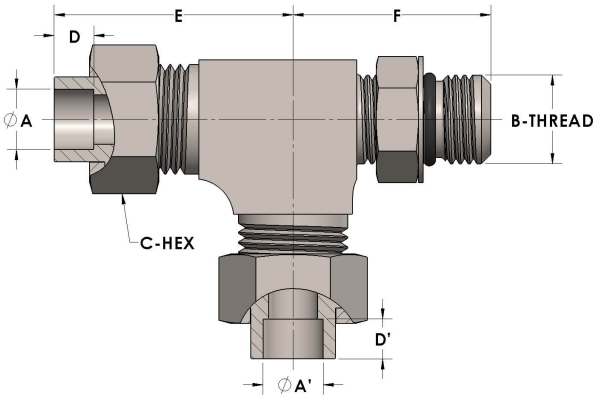

DIMENSIONS

A	0.250
A"	0.250
B-THREAD	.438" - 20UINF
C-HEX	0.63
D	0.190
D"	0.190
E	1.19
F	1.19

GENERAL

Pressure Rating	6000 PSI
Assembly Material	Carbon Steel, ASTM A108
O-Ring Material	Viton® Fluorocarbon Type 1, Class 2 (90 durometer)
Connection 1 Type	Female Tube Socket
Connection 1 Size	1/4” Tube O.D. (-04)
Connection 3 Type	Female Tube Socket
Connection 3 Size	1/4” Tube O.D. (-04)

The complete catalog contents must be reviewed to ensure that the system designer and user make a safe product selection. When selecting products, the total system design must be considered to ensure safe, trouble-free performance. Function, material compatibility, adequate ratings, proper installation, operation, and maintenance are the responsibilities of the system designer and user. Caution: Do not mix or interchange valve components with those of other manufacturers.