Product Category	H854-02-02-M
Part Description	Tube to Male Pipe Thread Union Assembly

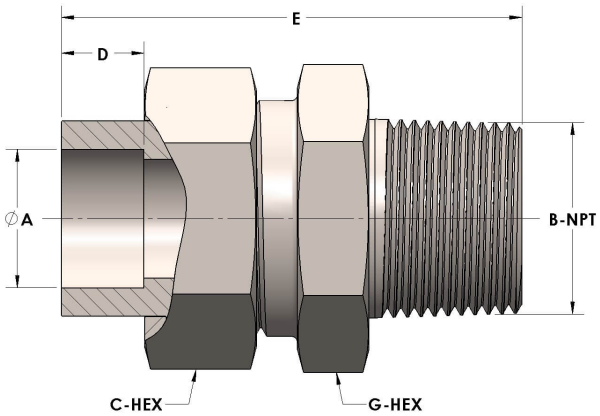

DIMENSIONS

A	0.130
B-NPT	1/8" - 27
C-HEX	0.63
D	0.190
E	1.38
G-HEX	0.63

GENERAL

Pressure Rating	6000 PSI
Assembly Material	Monel®, ASTM B164, UNS N04405
O-Ring Material	Viton® Fluorocarbon Type 1, Class 2 (90 durometer)
Connection 1 Type	Female Tube Socket
Connection 1 Size	1/8” Tube O.D. (-02)
Connection 2 Type	Male Pipe Thread
Connection 2 Size	1/8” NPT (-02)

The complete catalog contents must be reviewed to ensure that the system designer and user make a safe product selection. When selecting products, the total system design must be considered to ensure safe, trouble-free performance. Function, material compatibility, adequate ratings, proper installation, operation, and maintenance are the responsibilities of the system designer and user. Caution: Do not mix or interchange valve components with those of other manufacturers.