Product Category	H854-10-08-S
Part Description	Tube to Male Pipe Thread Union Assembly

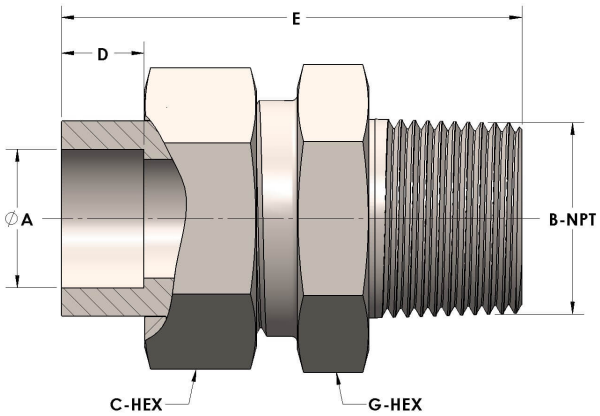

DIMENSIONS

A	0.630
B-NPT	1/2" - 14
C-HEX	1.13
D	0.380
E	2.25
G-HEX	1.06

GENERAL

Pressure Rating	3000 PSI
Assembly Material	Carbon Steel, ASTM A108
O-Ring Material	Viton® Fluorocarbon Type 1, Class 2 (90 durometer)
Connection 1 Type	Female Tube Socket
Connection 1 Size	5/8" Tube O.D. (-10)
Connection 2 Type	Male Pipe Thread
Connection 2 Size	1/2" NPT (-08)

The complete catalog contents must be reviewed to ensure that the system designer and user make a safe product selection. When selecting products, the total system design must be considered to ensure safe, trouble-free performance. Function, material compatibility, adequate ratings, proper installation, operation, and maintenance are the responsibilities of the system designer and user. Caution: Do not mix or interchange valve components with those of other manufacturers.