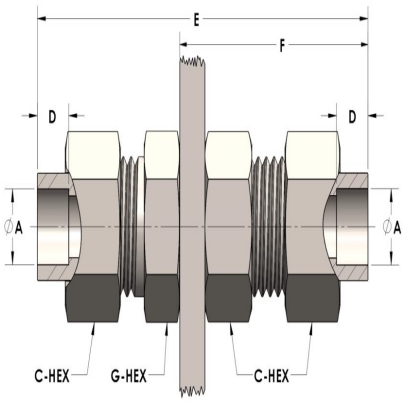

H890-04-S

Description

PRODUCTCATEGORY

1. Fitting

FITTINGTYPE

1. Mark VIIIÂ®

Date
11/03/2025